SK45SRX-7 SK55SRX-7

4-Way Blade (SK45SRX/SK55SRX)

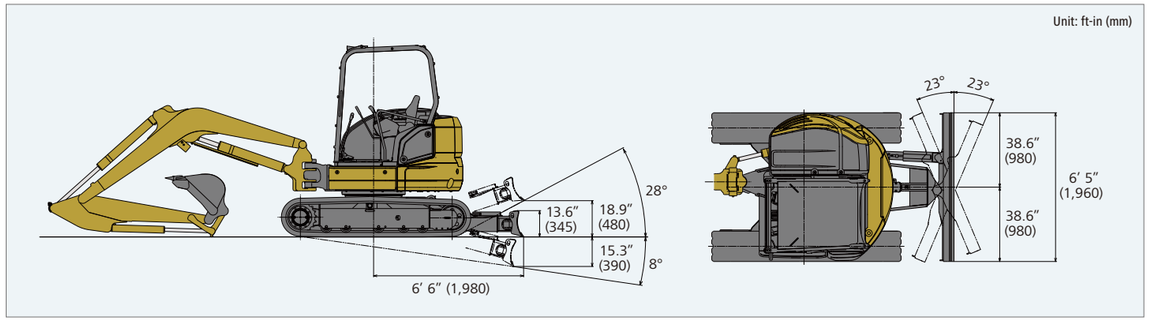

Note: This catalog may contain attachments and optional equipment that are not available in your area. And it may contain photographs of machines with specifications that differ from those of machines sold in your areas. Please consult your nearest KOBELCO distributor for those items you require. Due to our policy of continuous product improvements all designs and specifications are subject to change without advance notice.

KOBELCO CONSTRUCTION MACHINERY U.S.A. INC.

22350 Merchants Way, Katy, TX 77449
Tel: 281-888-8430 Fax: 281-506-8713
www.KOBELCO-USA.com

Inquiries To:

Bulletin No. SK45SRX/55SRX-7-NA-101-21120000N

KOBELCO

Hydraulic Excavator

SK45SRX SK45SRX-7
SK55SRX SK55SRX-7

Performance X Design

■ Bucket Capacity:

0.10–0.20 cu.yd. SAE

■ Engine Power:

37.0 hp {27.7 kW} @ 2,400 rpm (SAE NET)

■ Operating Weight:

10,295–10,648 lb {4,670–4,830 kg} SK45SRX

11,817–12,147 lb {5,360–5,510 kg} SK55SRX

DRIVEN BY PASSION

Complies with the latest exhaust emission regulations

US EPA Tier IV Final

Japanese Regulations

Performance X Design

PERFORMANCE BY DESIGN

The next generation of KOBELCO excavators brings together superior performance and thoughtful design like never before. Performance enhancements offer greater efficiency and productivity along with increased power and speed. Design improvements provide the ultimate in comfort and control.

KOBELCO refuses to compromise, creating machines that meet every challenge.

EXCEPTIONAL PERFORMANCE JUST GOT EVEN BETTER

Integrated-Flow Pump System

During the digging operation, depending upon job condition, the machine provides additional flow to the boom, arm or bucket circuit, from pump P3 (swing and dozer pump), to increase available input power to those functions. This drastically reduces cycle time and increases productivity.

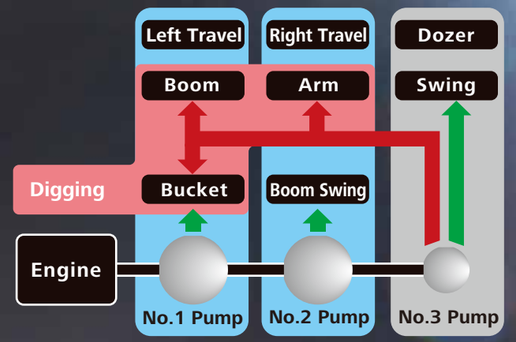

The New Hydraulic System

Compared to previous models, the new hydraulic system is significantly improved, which thereby shortens the digging cycle time remarkably. It attains high performances without reducing the speed even when a heavy load is applied or when traveling on a slope.

By re-designing the travel motor and swivel joint, the travel speed is increased.

››› Travel Speed

Faster by 12% (SK55SRX)

Faster by 5% (SK45SRX)

(Compared to previous models with 2nd speeds)

››› Hill-Climbing Speed

Faster by 10% (SK55SRX)

(Compared to previous models with 2nd speeds and 14 degree tilt)

By re-engineering the spool, efficiency improves, resulting in higher digging and swing speeds.

››› Digging Cycle Time

Shortened by 7% (SK55SRX)

(Compared to previous model)

FUNCTIONAL WORK ENVIRONMENT

Designed for operator comfort and convenience.

Color Monitor

The new color monitor shows current and historical operating information in a clear and easy-to-operate format.

Energy Conservation Mode

The SK45SRX/SK55SRX has 2 working modes, one for maximum power and S-mode for increased fuel economy.

Auto Deceleration

Auto deceleration saves fuel and lowers engine noise by lowering engine speed to idle.

Auxiliary Hydraulic Flow

Nibbler/breaker and rotation hydraulic flow has 6 presets that can be adjusted to match your attachment.

Maintenance Information

Operation History

Easy Access

The flip-up left console with integrated pilot control lock lever allows for easy entry and exit from the cab.

Slide-Open Window

The right side window can slide open from the front or the back for increased ventilation and to hear ground workers when required.

Ergonomic Lever Angles

Operators can move levers horizontally without twisting their wrists, reducing fatigue.

Multifunction and Rotation Hydraulics

Precise proportional controls are integrated into the joystick for ease of operation.

Radio (Bluetooth®, AUX and Hands-Free Phone Calls)

Speaker

12V Power Outlet

Boom Swing Control with HCP

Coat Hook

Cup Holder

LED Door Light

UNFORGETTABLE COMFORT

True ergonomic functionality combined with modern design has resulted in a cabin interior that is sleek and comfortable.

Suspension Seat

The newly designed seat comes standard with suspension, recline, forward/back functions giving best-in-class comfort.

Wrist Rests

The larger ergonomic designed wrist rests keep the operator's forearms in a stable position, reducing fatigue, and allowing for improved operation.

Air Conditioner

Multiple air vents to provide uniform airflow to the front and back of the operator as well as to the windows to provide fast defrosting functions.

LED Illumination

Dials and buttons are now backlit to provide a bright, clearer view in any lighting condition.

Smartphone Holder/ USB/AUX Port

COMPACT, YET, BIG PERFORMANCE

Compact Boom Swing Radius
(SK55SRX with Standard Arm)

6′1″ {1,850 mm}

*SK45SRX is 5′ 11″ {1,810 mm}.

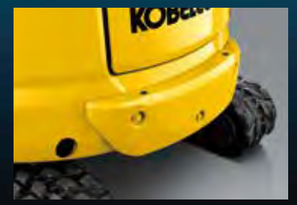

Short Tail Swing
Additional counterweight is equipped as standard for SK55SRX.

Tail Overhang:
7.0″ {190 mm}
SK45SRX with standard counterweight

11.0″ {290 mm}
SK55SRX with additional counterweight as standard

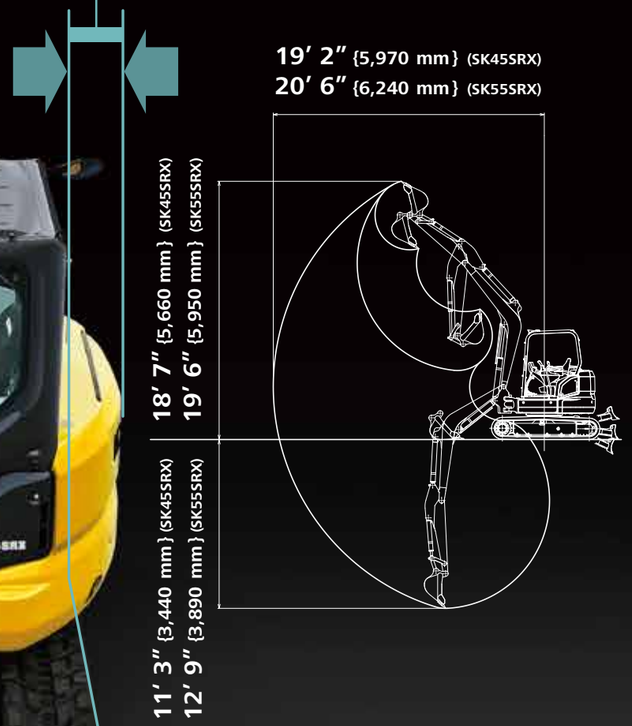

Wide Working Range
Long arms are provided as option equipment to ensure a wide working range.

VERSATILITY

Dozer Lever
The new ergonomic dozer lever has float integrated into the handle for easier dozer functions.

Dozer-Blade Shape
KOBELCO's unique blade design forms the earth into an arc that always falls forward. Because this prevents earth from falling behind the blade, leveling can be done with less passes.

Floating Dozer
Dozer float is standard to assist in easier leveling work.

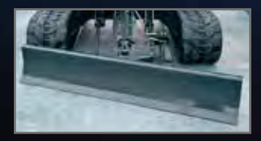

4-Way Blade (optional)

RELIABLE CONSTRUCTION

The boom, arm and swing bracket all have large cross-section segments for added attachment strength.

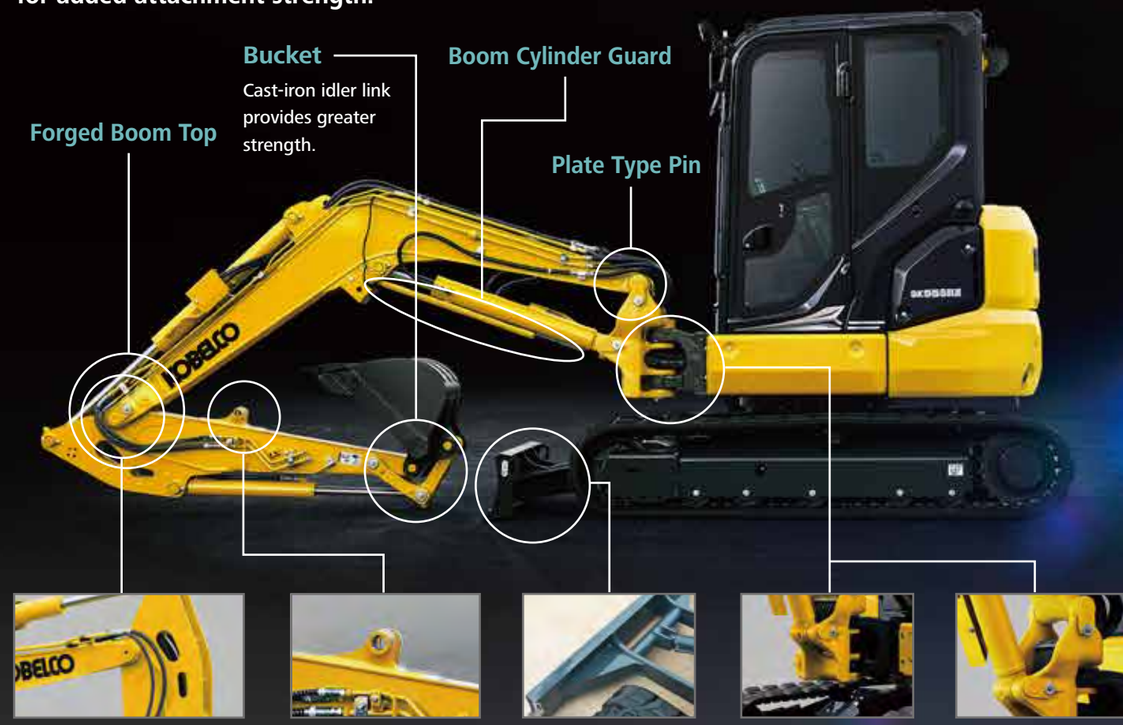

Bolt-Tightened Pins
Bolt-tightened pins firmly lock the boom to prevent the boom top from opening laterally.

Standard Thumb Mounting Bracket

Dozer
Reinforced dozer supports provide greater strength.

Swing Bracket
Large, thick cast-iron swing bracket/front bracket.

Hydraulic Hosing
The hydraulic hosing is housed inside the swing bracket for protection.

*The additional counterweight is standard on SK55SRX.

NON-STOP OPERATION BY iNDr

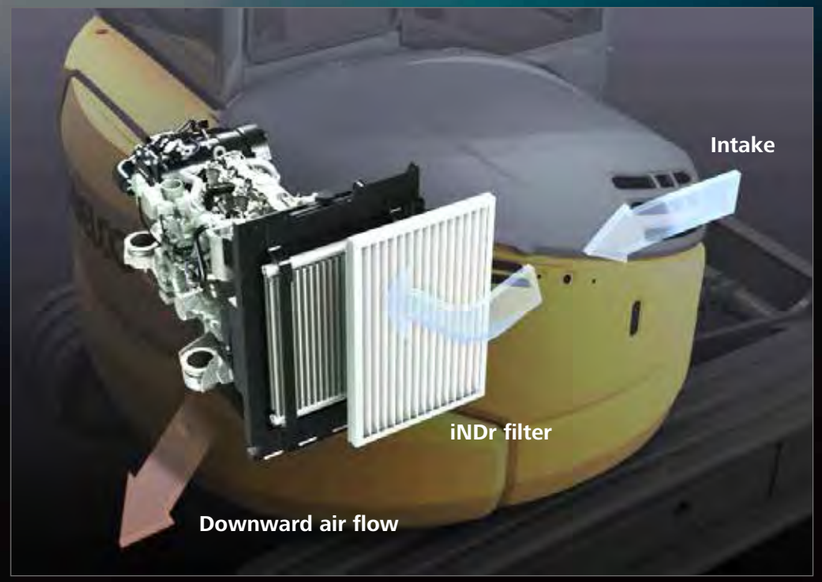

iNDr

A high-density mesh filter blocks dust intruding during air intake. This prevents the cooling device and the air cleaner from clogging with dust and maintains their performances. The ridges of the corrugated filter allow the air to pass through, and the grooves collect the dust, which prevents the filter from clogging.

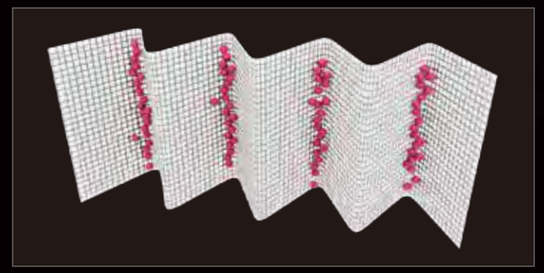

The iNDr filter has a high-density mesh of 30 lines per inch to collect dust.

EASY MAINTENANCE

Easy daily maintenance that saves the trouble of inspection and cleaning.

Easy Access to Component inside the Cab

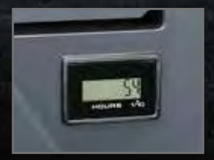

Hour Meter

Cab Fresh Air Intake Filter

Cab Re-Circulation Air Filter

Instruction Manual Storage Box

Standard Pattern Changer

Easy Access to Cooling Unit

iNDr Filter

Easy to remove for easy access to radiator and cooling system.

Easy Access to Engine Compartment

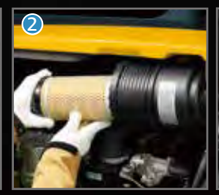

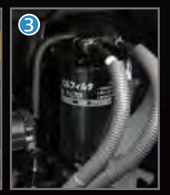

① Pre Fuel Filter with Built-in Water Separator
② Air Filter
③ High-Grade Fuel Filter

*The additional counterweight is standard on SK55SRX.

OPERATOR SAFETY

Robust Cab/Canopy Structure

The high-strength cab/canopy meets ISO 3471:2008, ISO 12117-2:2008 standards for greater operator safety.

Boom Light

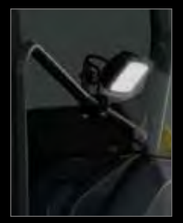

Left-Facing LED Light (Canopy)

Forward and Left-Facing LED Light (Cab)

ON/OFF Switch

LED Work Lights

Changed from halogen light to LED light for more brightness. The boom light position has been changed to improve nighttime visibility.
New left-facing lights on the cab top and canopy hand rail to improve visibility on the left side of the operator.

Good Visibility

The wiper mount has been moved to the upper right of the cab support and the skylight opening has been enlarged, improving visibility to the front and above.

Rear View Mirror

Rear Under Mirror (optional)

Hammer for Emergency Exit

Accumulator for Emergency Attachment Lowering

An installed accumulator allows the attachment to be safely lowered to the ground using in-cab controls in the event of an unexpected engine shut-down and class leading smooth operation.

Standard and Optional Equipment

●=Std ○=Opt — = N/A

Category	Description	SK45SRX-7	SK55SRX-7
Engine	YANMAR 4TNV88C-PYBD (Tier Ⅳ Final certified)	●	●
	Auto deceleration function	●	●
Hydraulic system	2 work modes H, S	●	●
	Proportional Hand Control for N&B	●	●
	Proportional Hand Control for Rotation & N&B*	○	○
	Remote N&B pressure relief adjustment	●	●
	Hydraulic flow adjustment	●	●
	Hydraulic oil VG46	●	●
	Hydraulic oil VG32	○	○
Cabin	Suspension seat (PVC)	●	●
	Multi-function color display	●	●
	Automatic climate control**	●	●
	Radio (FM/AM, AUX, USB, Bluetooth® & hands-free telephone)**	●	●
	12V power outlet	●	●
Lights	LED work light: 1 on boom	●	●
	LED work lights: 1 on front, 1 on left	●	●
Working equipment	Standard boom 8′ 11″ {2.71 m}	●	—
	Standard boom 9′ 10″ {2.99 m}	—	●
	Standard arm 5′ 1″ {1.55 m} with thumb bracket	●	—
	Standard arm 5′ 7″ {1.69 m} with thumb bracket	—	●
	Long arm 6′ 4″ {1.92 m} with thumb bracket	—	○
Counterweight	Standard C/W 1,764 lb (800 kg)	●	●
	Additional bolt on counterweight 551 lb (250 kg)	—	●
Undercarriage	15.7″ {400 mm} rubber tracks	●	●
	15.7″ {400 mm} double grouser shoe	○	○
	Dozer blade with float	●	●
	Angle dozer blade with float*	○	○
	Lower swivel guard	●	●
Safety	ROPS compliant canopy (ISO 3471:2008, ISO 12117-2:2008)	●	●
	ROPS compliant cab (ISO 3471:2008, ISO 12117-2:2008)	○	○
	Mesh-type front guard for canopy (OPG Level I)	○	○
	Mesh-type top guard for cab	○	○
	Mesh-type front guard for cab (OPG Level I)	○	○
	3-inch retractable seatbelt	●	●
	Travel alarm	●	●
	Left rear view mirror	●	●
	Rear under mirror	○	○
	Hose burst valve for boom & arm cylinder	○	○
Others	ISO to BHL pattern changer	●	●
	Arm & bucket cylinder rod guard	○	○
	Double element	○	○

*May not be ordered with combination Rotation and Angle dozer blade with float. ** Only for Cab.

Note: Bluetooth® is a registered trademark of the Bluetooth SIG Inc.

Specifications

GENERAL			
MODEL			SK45SRX
Type			SK45SRX-7
Operating Weight	Cab	lb {kg}	10,648 {4,830}
	Canopy	lb {kg}	10,295 {4,670}
Bucket Capacity		cu.yd. {m³}	0.11 {0.14}
Bucket Width (with side cutter)		ft-in {mm}	23.6″ {600}
Arm Length		ft-in {m}	5′ 1″ {1.55}
Bucket Digging Force (SAE)		lbf {kN}	6,992 {31.1} 9,802 {43.6} Two pin bucket
Arm Crowding Force (SAE)		lbf {kN}	4,473 {19.9}
ENGINE			
Model			YANMAR 4TNV88C-PYBD
Type			Water cooled, 4-cycle, 4-cylinder, direct injection, diesel engine, Tier IV Final certified
Power Output		hp {kW}/rpm	37.0 {27.7}/2,400 (SAE NET)
Max. Torque		lbf-ft {N·m}/rpm	101 {136.8}/1,560 (SAE NET)
Displacement		cu.in. {L}	133.6 {2.189}
Fuel Tank		U.S. gal {L}	19.8 {75}
HYDRAULIC SYSTEM			
Pump			Two variable displacement pumps+ two gear pumps (one for pilot)
Max. Discharge Flow		U.S. gpm {L/min}	2 x 13.2 {49.9}, 8.9 {33.8}, 2.9 {10.8}
Relief Valve Setting		psi {MPa}	3,340 {23.0}
Hydraulic Oil Tank (system)		U.S. gal {L}	7.4 {27.9} (15.3 {58.0})
TRAVEL SYSTEM			
Travel Motors			2 x axial-piston, two-step motors
Parking Brake			Oil disc brake per motor
Travel Speed (high/low)		mph {km/h}	2.6 {4.2}/1.4 {2.2}
Drawbar Pulling Force (SAE)		lbf {kN}	12,300 {54.8}
CRAWLER			
Shoe Width		in {mm}	15.7″ {400}
Ground Pressure	Cab	psi {kPa}	3.9 {27.2}
	Canopy	psi {kPa}	3.8 {26.3}
DOZER BLADE			
Width x Height		ft-in {mm}	6′ 5″ {1,960} x 13.6″ {345}
Working Ranges (height/depth)		ft-in {mm}	18.3″ {465} x 13.2″ {335}
SWING SYSTEM			
Swing Motor			Axial piston motor
Parking Brake			Oil disc brake, hydraulic operated automatically
Swing Speed		min⁻¹ {rpm}	8.5 {8.5}
Tail Swing Radius		ft-in {mm}	3′ 10″ {1,170}
Min. Front Swing Radius	Over the front: Cab	ft-in {mm}	7′ 5″ {2,250}
	Over the front: Canopy	ft-in {mm}	7′ 3″ {2,210}
	At full boom swing: Cab	ft-in {mm}	5′ 11″ {1,810}
	At full boom swing: Canopy	ft-in {mm}	5′ 11″ {1,810}
SIDE DIGGING MECHANISM			
Type			Boom swing
Offset Angle	To the left	degree	70
	To the right	degree	59

Dimensions

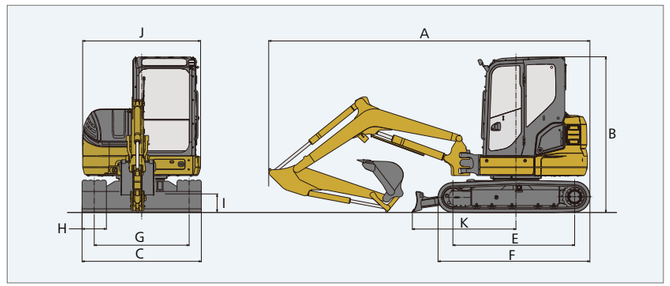

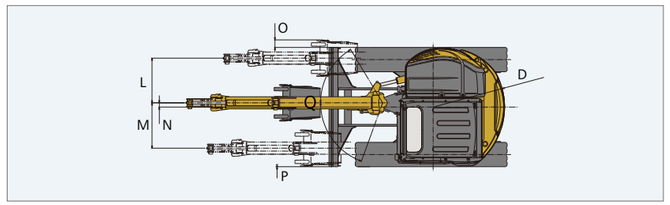

Working Ranges

Unit: ft-in {mm}

Model	SK45SRX	
	Cab	Canopy
Arm length	5′ 1″ {1.55 m}	
Boom length	8′ 11″ {2.71 m}	
a- Max. digging reach	19′ 2″ {5,850}	
b- Max. digging reach at ground level	18′ 8″ {5,700}	
c- Max. digging depth	11′ 3″ {3,440}	
d- Max. digging height	18′ 7″ {5,660}	18′ 10″ {5,750}
e- Max. dumping clearance	13′ 5″ {4,080}	13′ 8″ {4,160}
f- Min. dumping clearance	4′ 11″ {1,510}	5′ 1″ {1,560}
g- Max. vertical wall digging depth	9′ 3″ {2,820}	
h- Min. swing radius	7′ 5″ {2,250}	7′ 3″ {2,210}
h'- Min. swing radius at boom swing	5′ 11″ {1,810}	
i- Horizontal digging stroke at ground level	8′ 8″ {2,650}	
j- Digging depth for 2.4 m (8′) flat bottom	9′ 11″ {3,020}	
k- Dozer blade (height/depth)	18.3″ {465}/13.2″ {335}	

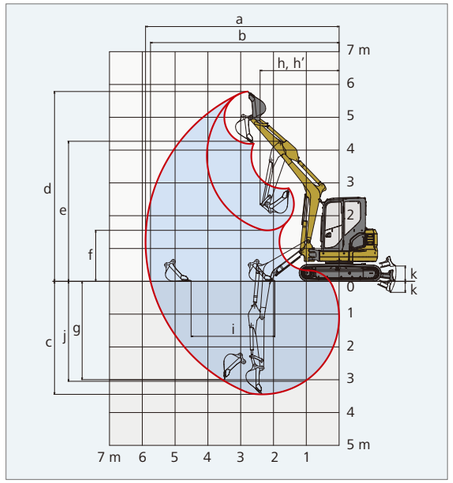

Hydraulic P.T.O.

Specification \ Output	Maximum Pressure psi {MPa}	Max. Flow U.S. gpm, {lpm}	
		2,000 rpm	1,000 rpm
N&B	3,340 {23.0}	18.4 {69.8}	9.2 {34.9}
Rotary	3,190 {22.0}	7.5 {28.2}	3.7 {14.1}

Unit: ft-in {mm}

Model		SK45SRX
A	Overall length	17′ 4″ {5,280}
B	Overall height (Cab/Canopy)	8′ 5″ {2,560}/8′ 4″ {2,530}
C	Overall width	6′ 5″ {1,960}
D	Tail swing radius (Std. counterweight)	3′ 10″ {1,170}
E	Tumbler distance	6′ 7″ {2,000}
F	Overall length of crawler	8′ 2″ {2,500}
G	Track gauge	5′ 1″ {1,560}
H	Shoe width	15.7″ {400}
I	Ground clearance	12.6″ {320}
J	Overall width of upperstructure	6′ 4″ {1,940}
K	Distance from dozer top to center of upperstructure	5′ 7″ {1,700}

Model		SK45SRX
L	Boom offset volume (right)	29.0″ {735}
M	Boom offset volume (left)	29.0″ {745}
N	Offset volume of boom center	2.8″ {70}
O	Digging distance outside crawler shoe (right)	4.9″ {125}
P	Digging distance outside crawler shoe (left)	0
Q	Boom swing angle (left/right)	70°/59°

SK45SRX

SK45SRX-7

Lift Capacities

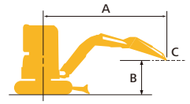

Rating over front

Rating over side or 90 degrees

A – Reach from swing centerline for arm top
B – Arm top height above/below ground
C – Lift point
Shoe: Rubber shoe Dozer blade: Down
* Relief valve setting: 3,340 psi {23.0 MPa}

SK45SRX Cab — Arm: 5′ 1″ {1.55 m} Bucket: Without Shoe: 15.7″ {400 mm} Counterweight: Standard counterweight Dozer: Blade down

B \ A		3′ 3″ {1.0 m}		6′ 7″ {2.0 m}		9′ 10″ {3.0 m}		13′ 1″ {4.0 m}		16′ 5″ {5.0 m}		At Max. Reach		Radius
13′ 1″ {4.0 m}	lb {kg}											*1,880 {850}	*1,880 {850}	13′ 0″ {3.96 m}
9′ 10″ {3.0 m}	lb {kg}					*2,560 {1,160}	*2,560 {1,160}	*2,540 {1,150}	1,900 {860}			*1,720 {780}	1,480 {670}	15′ 2″ {4.64 m}
6′ 7″ {2.0 m}	lb {kg}					*3,750 {1,700}	2,840 {1,290}	*2,940 {1,330}	1,830 {830}			*1,730 {780}	1,300 {590}	16′ 3″ {4.97 m}
3′ 3″ {1.0 m}	lb {kg}					*5,100 {2,310}	2,630 {1,190}	*3,450 {1,560}	1,750 {790}	*2,260 {1,020}	1,260 {570}	*1,850 {840}	1,240 {560}	16′ 6″ {5.04 m}
G. L.	lb {kg}			*3,050 {1,380}	*3,050 {1,380}	*5,640 {2,560}	2,530 {1,150}	*3,750 {1,700}	1,690 {760}			*2,150 {970}	1,290 {580}	15′ 11″ {4.86 m}
-3′ 3″ {-1.0 m}	lb {kg}	*4,430 {2,010}	*4,430 {2,010}	*5,950 {2,700}	4,940 {2,240}	*5,330 {2,420}	2,530 {1,140}	*3,560 {1,610}	1,680 {760}			*2,850 {1,290}	1,480 {670}	14′ 5″ {4.40 m}
-6′ 7″ {-2.0 m}	lb {kg}			*6,530 {2,960}	5,070 {2,300}	*3,990 {1,810}	2,600 {1,180}					*3,010 {1,360}	2,090 {940}	11′ 6″ {3.50 m}

SK45SRX Canopy — Arm: 5′ 1″ {1.55 m} Bucket: Without Shoe: 15.7″ {400 mm} Counterweight: Standard counterweight Dozer: Blade down

B \ A		3′ 3″ {1.0 m}		6′ 7″ {2.0 m}		9′ 10″ {3.0 m}		13′ 1″ {4.0 m}		16′ 5″ {5.0 m}		At Max. Reach		Radius
13′ 1″ {4.0 m}	lb {kg}											*1,880 {850}	1,840 {830}	13′ 0″ {3.96 m}
9′ 10″ {3.0 m}	lb {kg}					*2,560 {1,160}	*2,560 {1,160}	*2,540 {1,150}	1,810 {820}			*1,720 {780}	1,410 {640}	15′ 2″ {4.64 m}
6′ 7″ {2.0 m}	lb {kg}					*3,750 {1,700}	2,720 {1,230}	*2,940 {1,330}	1,740 {790}			*1,730 {780}	1,230 {560}	16′ 3″ {4.97 m}
3′ 3″ {1.0 m}	lb {kg}					*5,100 {2,310}	2,510 {1,140}	*3,450 {1,560}	1,660 {750}	*2,260 {1,020}	1,200 {540}	*1,850 {840}	1,180 {530}	16′ 6″ {5.04 m}
G. L.	lb {kg}			*3,050 {1,380}	*3,050 {1,380}	*5,640 {2,560}	2,410 {1,090}	*3,750 {1,700}	1,600 {720}			*2,150 {970}	1,220 {550}	15′ 11″ {4.86 m}
-3′ 3″ {-1.0 m}	lb {kg}	*4,430 {2,010}	*4,430 {2,010}	*5,950 {2,700}	4,710 {2,130}	*5,330 {2,420}	2,400 {1,090}	*3,560 {1,610}	1,600 {720}			*2,850 {1,290}	1,410 {640}	14′ 5″ {4.40 m}
-6′ 7″ {-2.0 m}	lb {kg}			*6,530 {2,960}	4,840 {2,190}	*3,990 {1,810}	2,470 {1,120}					*3,010 {1,360}	1,990 {900}	11′ 6″ {3.50 m}

SK45SRX Cab — Arm: 5′ 1″ {1.55 m} Bucket: Without Shoe: 15.7″ {400 mm} Counterweight: Standard counterweight + 551 lb {250 kg} Dozer: Blade down

B \ A		3′ 3″ {1.0 m}		6′ 7″ {2.0 m}		9′ 10″ {3.0 m}		13′ 1″ {4.0 m}		16′ 5″ {5.0 m}		At Max. Reach		Radius
13′ 1″ {4.0 m}	lb {kg}											*1,880 {850}	*1,880 {850}	13′ 0″ {3.96 m}
9′ 10″ {3.0 m}	lb {kg}					*2,560 {1,160}	*2,560 {1,160}	*2,540 {1,150}	2,170 {980}			*1,720 {780}	1,700 {770}	15′ 2″ {4.64 m}
6′ 7″ {2.0 m}	lb {kg}					*3,750 {1,700}	3,240 {1,470}	*2,940 {1,330}	2,100 {950}			*1,730 {780}	1,510 {680}	16′ 3″ {4.97 m}
3′ 3″ {1.0 m}	lb {kg}					*5,100 {2,310}	3,030 {1,370}	*3,450 {1,560}	2,020 {910}	*2,260 {1,020}	1,470 {660}	*1,850 {840}	1,450 {650}	16′ 6″ {5.04 m}
G. L.	lb {kg}			*3,050 {1,380}	*3,050 {1,380}	*5,640 {2,560}	2,930 {1,330}	*3,750 {1,700}	1,960 {890}			*2,150 {970}	1,500 {680}	15′ 11″ {4.86 m}
-3′ 3″ {-1.0 m}	lb {kg}	*4,430 {2,010}	*4,430 {2,010}	*5,950 {2,700}	5,690 {2,580}	*5,330 {2,420}	2,920 {1,320}	*3,560 {1,610}	1,950 {880}			*2,850 {1,290}	1,720 {780}	14′ 5″ {4.40 m}
-6′ 7″ {-2.0 m}	lb {kg}			*6,530 {2,960}	5,820 {2,640}	*3,990 {1,810}	3,000 {1,360}					*3,010 {1,360}	2,410 {1,090}	11′ 6″ {3.50 m}

SK45SRX Canopy — Arm: 5′ 1″ {1.55 m} Bucket: Without Shoe: 15.7″ {400 mm} Counterweight: Standard counterweight + 551 lb {250 kg} Dozer: Blade down

B \ A		3′ 3″ {1.0 m}		6′ 7″ {2.0 m}		9′ 10″ {3.0 m}		13′ 1″ {4.0 m}		16′ 5″ {5.0 m}		At Max. Reach		Radius
13′ 1″ {4.0 m}	lb {kg}											*1,880 {850}	*1,880 {850}	13′ 0″ {3.96 m}
9′ 10″ {3.0 m}	lb {kg}					*2,560 {1,160}	*2,560 {1,160}	*2,540 {1,150}	2,080 {940}			*1,720 {780}	1,630 {740}	15′ 2″ {4.64 m}
6′ 7″ {2.0 m}	lb {kg}					*3,750 {1,700}	3,110 {1,410}	*2,940 {1,330}	2,010 {910}			*1,730 {780}	1,440 {650}	16′ 3″ {4.97 m}
3′ 3″ {1.0 m}	lb {kg}					*5,100 {2,310}	2,910 {1,320}	*3,450 {1,560}	1,930 {870}	*2,260 {1,020}	1,400 {630}	*1,850 {840}	1,380 {630}	16′ 6″ {5.04 m}
G. L.	lb {kg}			*3,050 {1,380}	*3,050 {1,380}	*5,640 {2,560}	2,810 {1,270}	*3,750 {1,700}	1,870 {850}			*2,150 {970}	1,440 {650}	15′ 11″ {4.86 m}
-3′ 3″ {-1.0 m}	lb {kg}	*4,430 {2,010}	*4,430 {2,010}	*5,950 {2,700}	5,450 {2,470}	*5,330 {2,420}	2,800 {1,270}	*3,560 {1,610}	1,870 {840}			*2,850 {1,290}	1,650 {750}	14′ 5″ {4.40 m}
-6′ 7″ {-2.0 m}	lb {kg}			*6,530 {2,960}	5,590 {2,530}	*3,990 {1,810}	2,870 {1,300}					*3,010 {1,360}	2,310 {1,040}	11′ 6″ {3.50 m}

Note:
1. Do not attempt to lift or hold any load that is greater than these lift capacities at their specified lift point radius and heights. Weight of all accessories must be deducted from the above lift capacities.
2. Lift capacities are based on machine standing on level, firm, and uniform ground. User must make allowance for job conditions such as soft or uneven ground, out of level conditions, side loads, sudden stopping of loads, hazardous conditions, experience of personnel, etc.
3. Arm bucket pin, without bucket is defined as lift point.
4. The above lift capacities are in compliance with SAE J/ISO 10567. They do not exceed 87% of hydraulic lift capacity or 75% of tipping load. Lift capacities marked with an asterisk (*) are limited by hydraulic capacity rather than tipping load.
5. Operator should be fully acquainted with the Operator's and Maintenance Instructions before operating this machine. Rules for safe operation of equipment should be adhered to at all times.
6. Lift capacities apply to only machines as originally manufactured and normally equipped by KOBELCO CONSTRUCTION MACHINERY CO., LTD.

Specifications

GENERAL			
MODEL			SK55SRX
Type			SK55SRX-7
Operating Weight	Cab	lb {kg}	12,147 {5,510}*
	Canopy	lb {kg}	11,817 {5,360}*
Bucket Capacity		cu.yd. {m³}	0.12 {0.16}
Bucket Width (with side cutter)		ft-in {mm}	25.6″ {650}
Arm Length		ft-in {m}	5′ 7″ {1.69}
Bucket Digging Force (SAE)		lbf {kN}	6,992 {31.1} 9,802 {43.6} Two pin bucket
Arm Crowding Force (SAE)		lbf {kN}	5,417 {24.1}
ENGINE			
Model			YANMAR 4TNV88C-PYBD
Type			Water cooled, 4-cycle, 4-cylinder, direct injection, diesel engine, Tier IV Final certified
Power Output		hp {kW}/rpm	37.0 {27.7}/2,400 (SAE NET)
Max. Torque		lbf-ft {N·m}/rpm	101 {136.8}/1,560 (SAE NET)
Displacement		cu.in. {L}	133.6 {2.189}
Fuel Tank		U.S. gal {L}	19.8 {75}
HYDRAULIC SYSTEM			
Pump			Two variable displacement pumps+ two gear pumps (one for pilot)
Max. Discharge Flow		U.S. gpm {L/min}	2 x 14.0 {53.0}, 8.9 {33.8}, 8.9 {33.8}
Relief Valve Setting		psi {MPa}	3,340 {23.0}
Hydraulic Oil Tank (system)		U.S. gal {L}	7.4 {27.9} (15.6 {59.0})
TRAVEL SYSTEM			
Travel Motors			2 x axial-piston, two-step motors
Parking Brake			Oil disc brake per motor
Travel Speed (high/low)		mph {km/h}	2.8 {4.5} /1.5 {2.4}
Drawbar Pulling Force (SAE)		lbf {kN}	12,200 {54.3}
CRAWLER			
Shoe Width		in {mm}	15.7″ {400}
Ground Pressure	Cab	psi {kPa}	4.5 {31.1}*
	Canopy	psi {kPa}	4.4 {30.2}*
DOZER BLADE			
Width x Height		ft-in {mm}	6′ 5″ {1,960} x 13.6″ {345}
Working Ranges (height/depth)		ft-in {mm}	18.3″ {465} x 13.2″ {335}
SWING SYSTEM			
Swing Motor			Axial piston motor
Parking Brake			Oil disc brake, hydraulic operated automatically
Swing Speed		min⁻¹ {rpm}	8.5 {8.5}
Tail Swing Radius		ft-in {mm}	4′ 2″ {1,270}*
Min. Front Swing Radius	Over the front	Cab ft-in {mm}	7′ 5″ {2,250}
		Canopy ft-in {mm}	7′ 5″ {2,250}
	At full boom swing	Cab ft-in {mm}	6′ 1″ {1,850}
		Canopy ft-in {mm}	6′ 1″ {1,850}
SIDE DIGGING MECHANISM			
Type			Boom swing
Offset Angle	To the left	degree	70
	To the right	degree	59

*Figures show the values with additional counterweight equipped as standard.

Dimensions

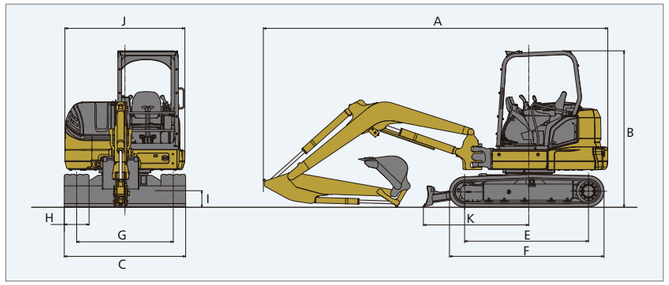

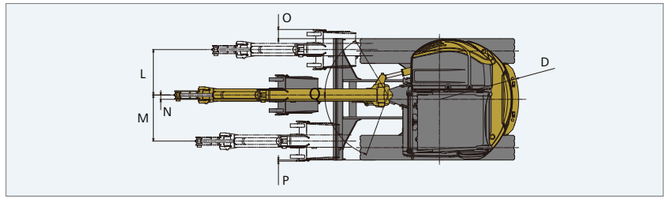

Working Ranges

Unit: ft-in {mm}

Model	SK55SRX			
	Cab	Canopy	Cab	Canopy
Boom length	9′ 10″ {2.99 m}			
Arm length	Standard 5′ 7″ {1.69 m}		Long 6′ 4″ {1.92 m}	
a- Max. digging reach	20′ 6″ {6,240}		21′ 2″ {6,460}	
b- Max. digging reach at ground level	20′ 0″ {6,100}		20′ 9″ {6,330}	
c- Max. digging depth	12′ 9″ {3,890}		13′ 6″ {4,120}	
d- Max. digging height	19′ 6″ {5,950}		20′ 0″ {6,100}	
e- Max. dumping clearance	14′ 4″ {4,370}		14′ 10″ {4,520}	
f- Min. dumping clearance	5′ 3″ {1,590}		4′ 6″ {1,360}	
g- Max. vertical wall digging depth	10′ 3″ {3,120}		11′ 0″ {3,350}	
h- Min. swing radius	7′ 5″ {2,250}		7′ 5″ {2,270}	
h'- Min. swing radius at boom swing	6′ 1″ {1,850}		6′ 2″ {1,870}	
i- Horizontal digging stroke at ground level	9′ 10″ {3,000}		11′ 1″ {3,390}	
j- Digging depth for 2.4 m (8′) flat bottom	11′ 5″ {3,470}		12′ 3″ {3,730}	
k- Dozer blade (height/depth)	18.3″ {465}/13.2″ {335}			

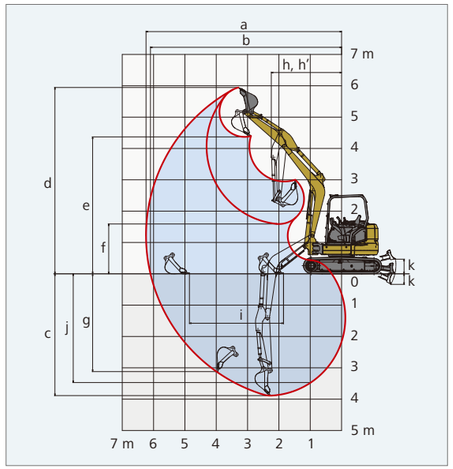

Hydraulic P.T.O.

Specification \ Output	Maximum Pressure psi {MPa}	Max. Flow U.S. gpm, {lpm}	
		2,000 rpm	1,000 rpm
N&B	3,340 {23.0}	19.1 {72.4}	9.6 {36.2}
Rotary	3,190 {22.0}	7.5 {28.2}	3.7 {14.1}

Unit: ft-in {mm}

Model		SK55SRX
A	Overall length (Additional counterweight)	18′ 3″ {5,560}
B	Overall height (Cab/Canopy)	8′ 5″ {2,560}/8′ 4″ {2,530}
C	Overall width	6′ 5″ {1,960}
D	Tail swing radius (Additional counterweight)	4′ 2″ {1,270}
E	Tumbler distance	6′ 7″ {2,000}
F	Overall length of crawler	8′ 2″ {2,500}
G	Track gauge	5′ 1″ {1,560}
H	Shoe width	15.7″ {400}
I	Ground clearance	12.6″ {320}
J	Overall width of upperstructure	6′ 4″ {1,940}
K	Distance from dozer top to center of upperstructure	5′ 7″ {1,700}

Model		SK55SRX
L	Boom offset volume (right)	29.0″ {735}
M	Boom offset volume (left)	29.0″ {745}
N	Offset volume of boom center	2.8″ {70}
O	Digging distance outside crawler shoe (right)	6.0″ {150}
P	Digging distance outside crawler shoe (left)	1.0″ {20}
Q	Boom swing angle (left/right)	70°/59°

SK55SRX

SK55SRX-7

Lift Capacities

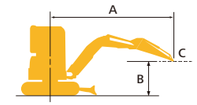

Rating over front

Rating over side or 90 degrees

A – Reach from swing centerline for arm top
B – Arm top height above/below ground
C – Lift point
Shoe: Rubber shoe Dozer blade: Down
* Relief valve setting: 3,340 psi {23.0 MPa}

SK55SRX Cab — Arm: 5′ 7″ {1.69 m} Bucket: Without Shoe: 15.7″ {400 mm} Counterweight: Standard counterweight + 551 lb {250 kg} Dozer: Blade down

B \ A		3′ 3″ {1.0 m}		6′ 7″ {2.0 m}		9′ 10″ {3.0 m}		13′ 1″ {4.0 m}		16′ 5″ {5.0 m}		At Max. Reach		Radius
16′ 5″ {5.0 m}	lb {kg}											*2,270 {1,030}	*2,270 {1,030}	11′ 1″ {3.38 m}
13′ 1″ {4.0 m}	lb {kg}							*2,040 {920}	*2,040 {920}			*2,200 {990}	2,090 {950}	14′ 8″ {4.47 m}
9′ 10″ {3.0 m}	lb {kg}							*2,190 {990}	*2,190 {990}	*2,210 {1,000}	1,750 {790}	*2,230 {1,010}	1,700 {770}	16′ 7″ {5.07 m}
6′ 7″ {2.0 m}	lb {kg}					*3,540 {1,600}	*3,540 {1,600}	*2,670 {1,210}	2,380 {1,080}	*2,340 {1,060}	1,710 {780}	*2,300 {1,040}	1,530 {690}	17′ 7″ {5.37 m}
3′ 3″ {1.0 m}	lb {kg}					*4,880 {2,210}	3,390 {1,540}	*3,210 {1,460}	2,280 {1,030}	*2,560 {1,160}	1,670 {750}	*2,390 {1,080}	1,480 {670}	17′ 9″ {5.43 m}
G. L.	lb {kg}			*2,760 {1,250}	*2,760 {1,250}	*5,420 {2,460}	3,280 {1,490}	*3,570 {1,620}	2,200 {1,000}	*2,690 {1,220}	1,640 {740}	*2,510 {1,140}	1,530 {690}	17′ 3″ {5.27 m}
-3′ 3″ {-1.0 m}	lb {kg}	*4,590 {2,080}	*4,590 {2,080}	*5,700 {2,580}	*5,700 {2,580}	*5,260 {2,390}	3,270 {1,480}	*3,560 {1,610}	2,190 {990}			*2,650 {1,200}	1,700 {770}	15′ 11″ {4.85 m}
-6′ 7″ {-2.0 m}	lb {kg}	*7,080 {3,210}	*7,080 {3,210}	*7,320 {3,320}	6,490 {2,940}	*4,450 {2,010}	3,330 {1,510}	*2,920 {1,320}	2,230 {1,010}			*2,780 {1,260}	2,170 {980}	13′ 5″ {4.09 m}
-9′ 10″ {-3.0 m}	lb {kg}			*3,430 {1,560}	*3,430 {1,560}							*2,590 {1,170}	*2,590 {1,170}	8′ 3″ {2.52 m}

SK55SRX Canopy — Arm: 5′ 7″ {1.69 m} Bucket: Without Shoe: 15.7″ {400 mm} Counterweight: Standard counterweight + 551 lb {250 kg} Dozer: Blade down

B \ A		3′ 3″ {1.0 m}		6′ 7″ {2.0 m}		9′ 10″ {3.0 m}		13′ 1″ {4.0 m}		16′ 5″ {5.0 m}		At Max. Reach		Radius
16′ 5″ {5.0 m}	lb {kg}											*2,270 {1,030}	*2,270 {1,030}	11′ 1″ {3.38 m}
13′ 1″ {4.0 m}	lb {kg}							*2,040 {920}	*2,040 {920}			*2,200 {990}	2,020 {910}	14′ 8″ {4.47 m}
9′ 10″ {3.0 m}	lb {kg}							*2,190 {990}	*2,190 {990}	*2,210 {1,000}	1,680 {760}	*2,230 {1,010}	1,640 {740}	16′ 7″ {5.07 m}
6′ 7″ {2.0 m}	lb {kg}					*3,540 {1,600}	3,520 {1,600}	*2,670 {1,210}	2,300 {1,040}	*2,340 {1,060}	1,650 {750}	*2,300 {1,040}	1,480 {670}	17′ 7″ {5.37 m}
3′ 3″ {1.0 m}	lb {kg}					*4,880 {2,210}	3,270 {1,480}	*3,210 {1,460}	2,200 {990}	*2,560 {1,160}	1,610 {730}	*2,390 {1,080}	1,420 {640}	17′ 9″ {5.43 m}
G. L.	lb {kg}			*2,760 {1,250}	*2,760 {1,250}	*5,420 {2,460}	3,160 {1,430}	*3,570 {1,620}	2,120 {960}	*2,690 {1,220}	1,570 {710}	*2,510 {1,140}	1,470 {660}	17′ 3″ {5.27 m}
-3′ 3″ {-1.0 m}	lb {kg}	*4,590 {2,080}	*4,590 {2,080}	*5,700 {2,580}	*5,700 {2,580}	*5,260 {2,390}	3,150 {1,430}	*3,560 {1,610}	2,100 {950}			*2,650 {1,200}	1,640 {740}	15′ 11″ {4.85 m}
-6′ 7″ {-2.0 m}	lb {kg}	*7,080 {3,210}	*7,080 {3,210}	*7,320 {3,320}	6,260 {2,840}	*4,450 {2,010}	3,210 {1,450}	*2,920 {1,320}	2,150 {970}			*2,780 {1,260}	2,090 {950}	13′ 5″ {4.09 m}
-9′ 10″ {-3.0 m}	lb {kg}			*3,430 {1,560}	*3,430 {1,560}							*2,590 {1,170}	*2,590 {1,170}	8′ 3″ {2.52 m}

SK55SRX Cab — Arm: 6′ 4″ {1.92 m} Bucket: Without Shoe: 15.7″ {400 mm} Counterweight: Standard counterweight + 551 lb {250 kg} Dozer: Blade down

B \ A		3′ 3″ {1.0 m}		6′ 7″ {2.0 m}		9′ 10″ {3.0 m}		13′ 1″ {4.0 m}		16′ 5″ {5.0 m}		At Max. Reach		Radius
16′ 5″ {5.0 m}	lb {kg}											*2,050 {930}	*2,050 {930}	12′ 4″ {3.76 m}
13′ 1″ {4.0 m}	lb {kg}							*1,790 {810}	*1,790 {810}			*2,030 {920}	1,900 {860}	15′ 7″ {4.75 m}
9′ 10″ {3.0 m}	lb {kg}							*1,970 {890}	*1,970 {890}	*2,020 {910}	1,750 {790}	*2,070 {940}	1,580 {710}	17′ 5″ {5.31 m}
6′ 7″ {2.0 m}	lb {kg}					*3,130 {1,420}	*3,130 {1,420}	*2,460 {1,110}	2,390 {1,080}	*2,200 {990}	1,710 {770}	*2,140 {970}	1,430 {650}	18′ 4″ {5.59 m}
3′ 3″ {1.0 m}	lb {kg}					*4,570 {2,070}	3,400 {1,540}	*3,050 {1,380}	2,270 {1,030}	*2,450 {1,110}	1,650 {750}	*2,230 {1,010}	1,380 {620}	18′ 6″ {5.65 m}
G. L.	lb {kg}			*2,860 {1,300}	*2,860 {1,300}	*5,310 {2,400}	3,260 {1,470}	*3,470 {1,570}	2,180 {990}	*2,630 {1,190}	1,610 {730}	*2,350 {1,060}	1,410 {640}	18′ 0″ {5.50 m}
-3′ 3″ {-1.0 m}	lb {kg}	*4,000 {1,810}	*4,000 {1,810}	*5,200 {2,360}	*5,200 {2,360}	*5,310 {2,410}	3,220 {1,460}	*3,560 {1,610}	2,150 {970}	*2,590 {1,170}	1,600 {720}	*2,480 {1,120}	1,560 {700}	16′ 9″ {5.10 m}
-6′ 7″ {-2.0 m}	lb {kg}	*6,130 {2,780}	*6,130 {2,780}	*7,990 {3,620}	6,380 {2,890}	*4,680 {2,120}	3,270 {1,480}	*3,140 {1,420}	2,180 {990}			*2,630 {1,190}	1,930 {870}	14′ 5″ {4.39 m}
-9′ 10″ {-3.0 m}	lb {kg}			*4,760 {2,160}	*4,760 {2,160}	*2,790 {1,260}	*2,790 {1,260}					*2,660 {1,210}	*2,660 {1,210}	10′ 0″ {3.07 m}

SK55SRX Canopy — Arm: 6′ 4″ {1.92 m} Bucket: Without Shoe: 15.7″ {400 mm} Counterweight: Standard counterweight + 551 lb {250 kg} Dozer: Blade down

B \ A		3′ 3″ {1.0 m}		6′ 7″ {2.0 m}		9′ 10″ {3.0 m}		13′ 1″ {4.0 m}		16′ 5″ {5.0 m}		At Max. Reach		Radius
16′ 5″ {5.0 m}	lb {kg}											*2,050 {930}	*2,050 {930}	12′ 4″ {3.76 m}
13′ 1″ {4.0 m}	lb {kg}							*1,790 {810}	*1,790 {810}			*2,030 {920}	1,840 {830}	15′ 7″ {4.75 m}
9′ 10″ {3.0 m}	lb {kg}							*1,970 {890}	*1,970 {890}	*2,020 {910}	1,690 {760}	*2,070 {940}	1,520 {690}	17′ 5″ {5.31 m}
6′ 7″ {2.0 m}	lb {kg}					*3,130 {1,420}	*3,130 {1,420}	*2,460 {1,110}	2,310 {1,040}	*2,200 {990}	1,640 {740}	*2,140 {970}	1,380 {620}	18′ 4″ {5.59 m}
3′ 3″ {1.0 m}	lb {kg}					*4,570 {2,070}	3,280 {1,490}	*3,050 {1,380}	2,190 {990}	*2,450 {1,110}	1,590 {720}	*2,230 {1,010}	1,330 {600}	18′ 6″ {5.65 m}
G. L.	lb {kg}			*2,860 {1,300}	*2,860 {1,300}	*5,310 {2,400}	3,130 {1,420}	*3,470 {1,570}	2,100 {950}	*2,630 {1,190}	1,550 {700}	*2,350 {1,060}	1,360 {610}	18′ 0″ {5.50 m}
-3′ 3″ {-1.0 m}	lb {kg}	*4,000 {1,810}	*4,000 {1,810}	*5,200 {2,360}	*5,200 {2,360}	*5,310 {2,410}	3,110 {1,410}	*3,560 {1,610}	2,070 {940}	*2,590 {1,170}	1,540 {700}	*2,480 {1,120}	1,500 {680}	16′ 9″ {5.10 m}
-6′ 7″ {-2.0 m}	lb {kg}	*6,130 {2,780}	*6,130 {2,780}	*7,990 {3,620}	6,150 {2,790}	*4,680 {2,120}	3,150 {1,430}	*3,140 {1,420}	2,100 {950}			*2,630 {1,190}	1,860 {840}	14′ 5″ {4.39 m}
-9′ 10″ {-3.0 m}	lb {kg}			*4,760 {2,160}	*4,760 {2,160}	*2,790 {1,260}	*2,790 {1,260}					*2,660 {1,210}	*2,660 {1,210}	10′ 0″ {3.07 m}

Note:
1. Do not attempt to lift or hold any load that is greater than these lift capacities at their specified lift point radius and heights. Weight of all accessories must be deducted from the above lift capacities.
2. Lift capacities are based on machine standing on level, firm, and uniform ground. User must make allowance for job conditions such as soft or uneven ground, out of level conditions, side loads, sudden stopping of loads, hazardous conditions, experience of personnel, etc.
3. Arm bucket pin, without bucket is defined as lift point.
4. The above lift capacities are in compliance with SAE J/ISO 10567. They do not exceed 87% of hydraulic lift capacity or 75% of tipping load. Lift capacities marked with an asterisk (*) are limited by hydraulic capacity rather than tipping load.
5. Operator should be fully acquainted with the Operator's and Maintenance Instructions before operating this machine. Rules for safe operation of equipment should be adhered to at all times.
6. Lift capacities apply to only machines as originally manufactured and normally equipped by KOBELCO CONSTRUCTION MACHINERY CO., LTD.